THIS DRAWING IS UNPUBLISHED. RELEASED FOR PUBLICATION 20
© COPYRIGHT 20 BY TYCO ELECTRONICS CORPORATION. ALL RIGHTS RESERVED.

SET UP GAGE 458637-3

LOC	DIST
A	66

REVISIONS

P	LTR	DESCRIPTION	DATE	DWN	APVD
	A	SEE ECO-06-010417	03MAY2006	LJL	MC

PART NUMBER	REV	TERMINATOR	FEED TYPE	DESCRIPTION
1528636-1	A	LEADMAKER	MECH POST FEED	CUTS CARRIER
1528636-2	A	BENCH	MECH PRE FEED	CUTS CARRIER
1528636-6	A	LEADMAKER	MECH POST FEED	CONTINUOUS CARRIER
7-1528636-1	A	LEADMAKER	MECH POST FEED	-1 AND SPARE PARTS
7-1528636-2	A	BENCH	MECH PRE FEED	-2 AND SPARE PARTS
7-1528636-6	A	LEADMAKER	MECH POST FEED	-6 AND SPARE PARTS
7-1528636-7	A	-	-	SPARE PARTS KIT

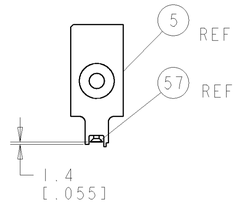

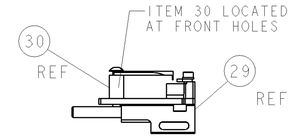

FEED TRACK POSITION
GUIDE BY INS. BARREL

TERMINAL SUPPORT
LOCATION

CRIMP DATA	SUMITOMO TERMINAL		TYCO CRIMP SPEC 5 7
TERMINAL NAME: SUMITOMO RECEPTACLE			
CRIMP	SIZE	TYPE	RANGE
WIRE	1.40 [.055 IN]	F	0.35-0.50mm²
INSUL	1.78 [.070 IN]	O	1.20-1.60 [.047-.063 IN] 5
WIRE STRIP LENGTH 3.20-4.00 [.126-.157 IN]			APPL INSTRUCTIONS 408-8322 & 408-8490
TERMINAL APPL SPEC	NONE -		FEED 9.00 [.354 IN]

TERMINALS APPLIED

TYCO TERM PN	MANUF TERM PN	TYCO SEAL PN	MANUF SEAL PN
1949006-1	8100-2924	1949007-1	3B0 972 742 D
-	-	1949007-2	3B0 972 742 E
-	-	-	-
-	-	-	-

WIRE SIZE	CRIMP HEIGHT *	REF SETTING *
0.50 mm²	0.86 ±0.05 [.034 ±.002 IN]	C 4
0.35 mm²	0.79 ±0.05 [.031 ±.002 IN]	C 8
-	-	-
-	-	-
-	-	-
-	-	-
-	-	-
-	-	-
-	-	-
-	-	-
-	-	-
-	-	-

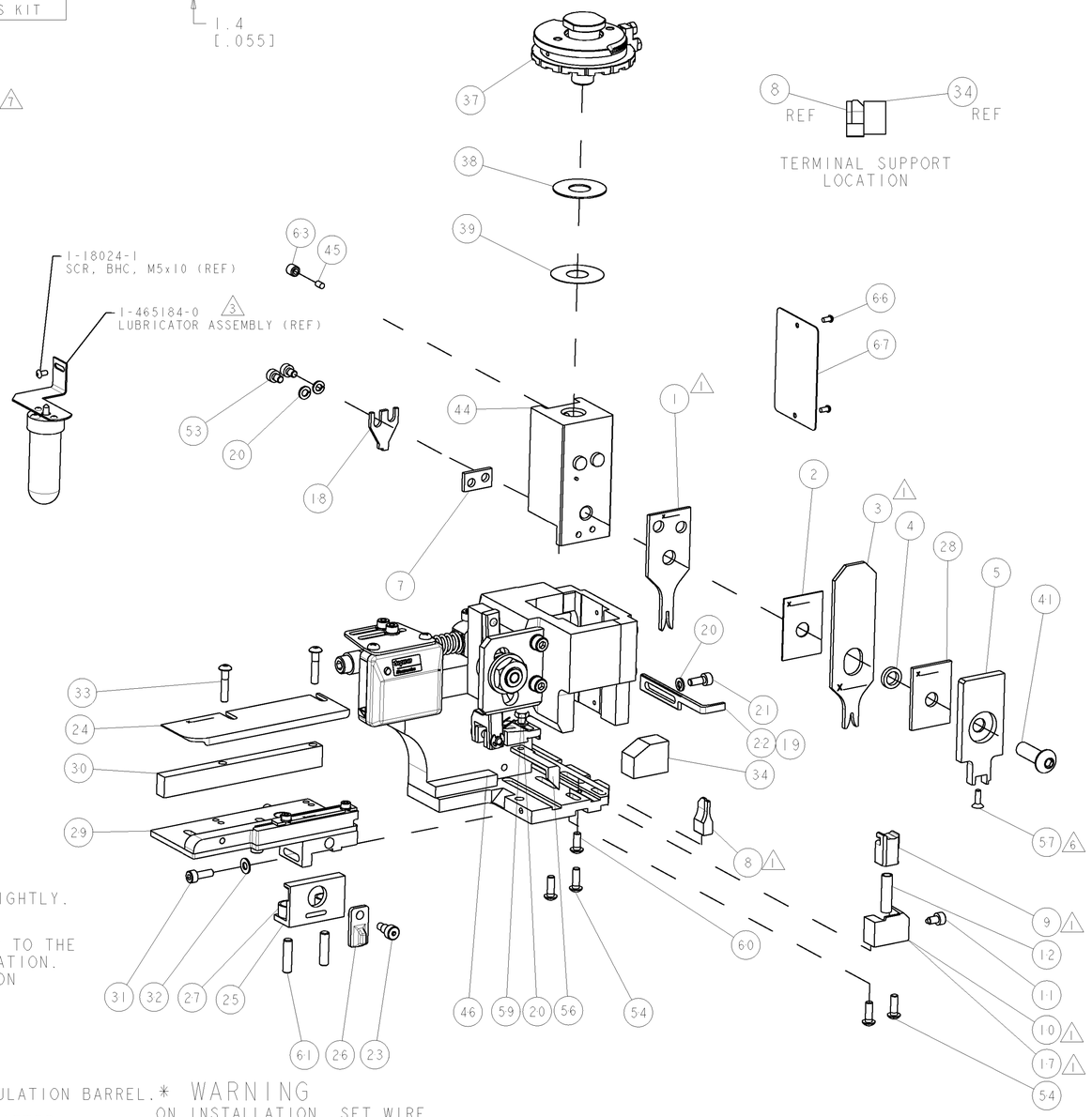

1. RECOMMENDED SPARE PARTS
2. GREASE RAM, CAM, CAM FOLLOWER AND FEED ROD LIGHTLY.

3. CERTAIN TERMINALS REQUIRE LUBRICATION. REFER TO THE APPLICATOR INSTRUCTION SHEET FOR MORE INFORMATION.
4. LUBRICATE DAILY PER THE APPLICATOR INSTRUCTION SHEET SUPPLIED WITH THE APPLICATOR

5. THIS APPLICATOR APPLIES TERMINAL WITH A SEAL.
SEAL RANGES:-
PN 3B0 972 742 D = 1.20 TO 1.30MM.
PN 3B0 972 742 E = 1.40 TO 1.60MM.
SEALS TO BE ORIENTATED VERTICALLY IN THE INSULATION BARREL.

6. APPLY TORQ-SEAL IN ALLEN SOCKET TO FILL HOLE AFTER FLAT HD HAS BEEN ADJUSTED TO CORRECT HEIGHT AT QUALIFICATION. APPLY #1-23419-5 LOC-TITE TO THREADS.

7. ALL CRIMP DATA CALCULATED BY TYCO ELECTRONICS UK LTD.

* WARNING
ON INSTALLATION, SET WIRE DISC TO LARGEST WIRE SIZE SETTING. USE OF SETTINGS BELOW MIN. REQUIRED CRIMP HEIGHT SETTING WILL CAUSE DAMAGE TO CRIMP TOOLING.

VIEW B ROTATED 180°

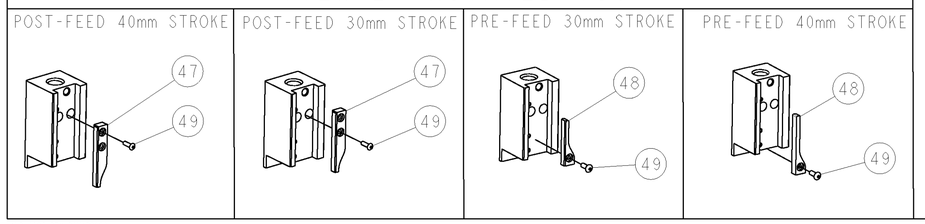

-77	-76	-72	-71	-6	-2	-1	PART NO	DESCRIPTION	ITEM NO
-	-	-	-	-	-	-	-	-	83
-	-	-	-	-	-	-	-	-	82
-	-	-	-	-	-	-	-	-	81
-	-	-	-	-	-	-	-	-	80
-	-	-	-	-	-	-	-	-	79
-	-	-	-	-	-	-	-	-	78
-	-	-	-	-	-	-	-	-	77
-	-	-	-	-	-	-	-	-	76
-	-	-	-	-	-	-	-	-	75
-	-	-	-	-	-	-	-	-	74
-77	-76	-72	-71	-6	-2	-1	PART NO	DESCRIPTION	ITEM NO
-	-	-	-	-	-	-	-	-	73
-	-	-	-	-	-	-	-	-	72
-	1	1	1	1	1	1	1338705-3	DOCUMENTATION PACKAGE	71
-	-	-	-	-	-	-	-	-	70
-	-	-	-	-	-	-	-	-	69
-	-	-	-	-	-	-	-	-	68
-	1	1	1	1	1	1	461264-5	PLATE, IDENTIFICATION	67
-	2	2	2	2	2	2	21017-2	SCREW, DRIVE	66
-	-	-	-	-	-	-	-	-	65
-	-	-	-	-	-	-	-	-	64
-	1	1	1	1	1	1	3-18031-0	SCR, SET, CUP POINT M6 X 6.0	63
-	-	-	-	-	-	-	-	-	62
-	2	2	2	2	2	2	2-18032-5	SCR, SET, FLT POINT M5 X 20.0	61
-	1	1	1	1	1	1	18024-7	SCR, BTN SKT HD CAP (M4 X 10.0)	60
-	1	1	1	1	1	1	5-18022-2	SCR, HEX HD CAP M4 X 8.0	59
-	-	-	-	-	-	-	-	-	58
-	1	1	1	1	1	1	985575-3	SCR, FLT SKT HD CAP M3 X 10.0	57
-	1	1	1	1	1	1	1338685-1	PAWL, FEED	56
-	-	-	-	-	-	-	-	-	55
-	4	4	4	4	4	4	18024-8	SCR, BTN SKT HD CAP (M4 X 12.0)	54
-	2	2	2	2	2	2	18023-9	SCR, SKT HD CAP M4 X 6.0	53
-	-	-	-	-	-	-	-	-	52
-	-	-	-	-	-	-	-	-	51
-	-	-	-	-	-	-	-	-	50
-	1	1	1	1	1	1	18024-3	SCR, BTN SKT HD CAP (M3 X 10.0)	49
-	-	1	-	-	1	-	1338675-1	CAM, UNIVERSAL PRE FEED	48
-	1	-	1	1	-	1	1338676-1	CAM, UNIVERSAL POST-FEED	47
-	1	1	1	1	1	1	1320999-3	APPLICATOR SUBASSEMBLY, HDI	46
-	1	1	1	1	1	1	690191-1	PLUG,NYLON	45
-	1	1	1	1	1	1	1338660-1	RAM	44
-	-	-	-	-	-	-	-	-	43
-	-	-	-	-	-	-	-	-	42
-	1	1	1	1	1	1	2-18024-6	SCR, BTN SKT HD CAP (M8 X 25.0)	41
-	-	-	-	-	-	-	-	-	40
-	1	1	1	1	1	1	690125-1	SHIM SUB-ASSY	39
-	1	1	1	1	1	1	469367-8	SHIM	38
-	1	1	1	1	1	1	879103-2	DISC, ADJUSTABLE GEITNER	37
-	-	-	-	-	-	-	-	-	36
-	-	-	-	-	-	-	-	-	35
-	1	1	1	1	1	1	1320934-6	SUPPORT, TERMINAL	34
-	2	2	2	2	2	2	1-18024-0	SCR, BTN SKT HD CAP (M4 X 20.0)	33
-	1	1	1	1	1	1	18027-2	WASHER, FLAT, REG M4	32
-	1	1	1	1	1	1	1-18023-2	SCR, SKT HD CAP M4 X 12.0	31
-	1	1	1	1	1	1	1320908-1	SPACER, STRIP GUIDE	30
-	1	1	1	1	1	1	1633073-1	STRIP GUIDE ASSEMBLY	29
-	1	1	1	1	1	1	2-455888-0	SPACER, CRIMPER	28
-	2	2	2	2	2	2	1-22284-0	SPRING, COMPRESSION	27
-	1	1	1	1	1	1	356835-1	LEVER, DRAG RELEASE	26
-	1	1	1	1	1	1	240792-1	DRAG, TERMINAL	25
-	1	1	1	1	1	1	1320928-1	PLATE, STRIP GUIDE	24
-	1	1	1	1	1	1	980371-4	SCR, SKT HD SHLDR 5.0 DIA X 6.0	23
-	1	-	1	1	-	1	690472-2	STRIPPER	22
-	1	1	1	1	1	1	1-18023-1	SCR, SKT HD CAP M4 X 10.0	21
-	4	4	4	4	4	4	18025-2	WASHER, SPRG LOCK, REG M4	20
-	-	1	-	-	1	-	690472-1	STRIPPER	19
-	1	1	1	1	1	1	879657-2	HOLD DOWN	18
1 -	1	-	-	1	-	-	1338684-2	HOLDER, SHEAR, NO-CUT	17
-	-	-	-	-	-	-	-	-	16
-	-	-	-	-	-	-	-	-	15
-	-	-	-	-	-	-	-	-	14
-	-	-	-	-	-	-	-	-	13
-	1	1	1	1	1	1	3-22280-3	SPRING, COMPRESSION	12
-	1	1	1	1	1	1	356885-5	STOP, SHEAR	11
1 -	-	1	1	-	1	1	1-1320921-0	SHEAR HOLDER, FRONT, CUT	10
1 -	1	1	1	1	1	1	318707-7	FLOATING SHEAR, FRONT	9
1 1	2	2	2	1	1	1	1633128-6	ANVIL, COMBINATION .055	8
-	1	1	1	1	1	1	4-240641-0	SPACER	7
-	-	-	-	-	-	-	-	-	6
-	1	1	1	1	1	1	1338680-5	DEPRESSOR, SHEAR	5
-	1	1	1	1	1	1	238011-4	BLOCK, CRIMPER SPACER	4
1 1	2	2	2	1	1	1	7-1583690-0	CRIMPER, INSUL O	3
-	1	1	1	1	1	1	455888-6	SPACER, CRIMPER	2
1 1	2	2	2	1	1	1	456402-1	CRIMPER, WIRE PREMIUM	1
-77	-76	-72	-71	-6	-2	-1	PART NO	DESCRIPTION	ITEM NO

THIS DRAWING IS A CONTROLLED DOCUMENT FOR TYCO ELECTRONICS CORPORATION. IT IS SUBJECT TO CHANGE AND THE CONTROLLING ENGINEERING ORGANIZATION SHOULD BE CONTACTED FOR THE LATEST REVISION.

DIMENSIONS: mm [IN]

TOLERANCES UNLESS OTHERWISE SPECIFIED:
0 PLC ±-
1 PLC ±-
2 PLC ±-
3 PLC ±-
4 PLC ±-
ANGLES ±-

MATERIAL - -
FINISH - -

DWN L LOFTHOUSE 30MAR06
CHK -
APVD M.CLIFFORD 30MAR06
PRODUCT SPEC -
APPLICATION SPEC See Table
WEIGHT -

tyco Electronics
Tyco Electronics
Harrisburg, PA 17105-3608

NAME
FINE ADJUST SIDE FEED
HDI APPLICATOR
-

SIZE A1 | CAGE CODE 00779 | DRAWING NO C-1528636 | RESTRICTED TO -

CUSTOMER DRAWING | SCALE 3:5 | SHEET 1 OF 1 | REV A

AMP 4805 REV 31MAR2000

Pro/ENGINEER DRAWING