SHEET OF

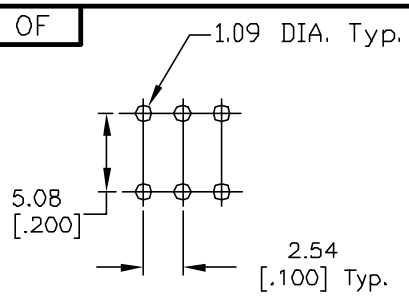

RECOMMEND P.C.B. LAYOUT

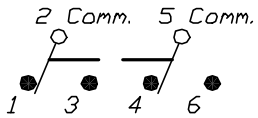

CIRCUIT: DPDT

CONTACT CONFIGURATION

SWITCH FUNCTION		
POS. 1	POS. 2	POS. 3
ON	NONE	ON
2-3,5-6	OPEN	2-1,5-4

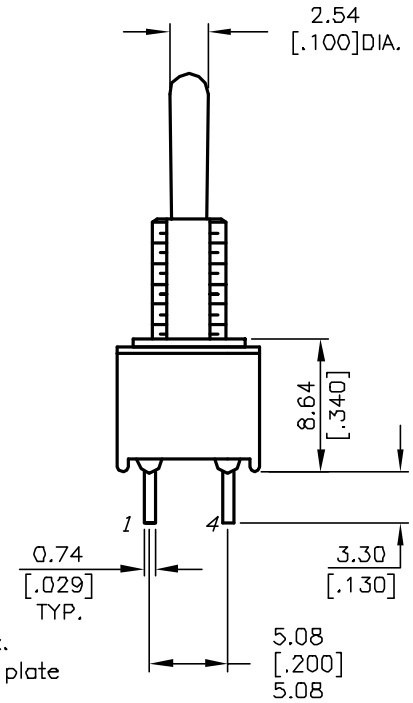

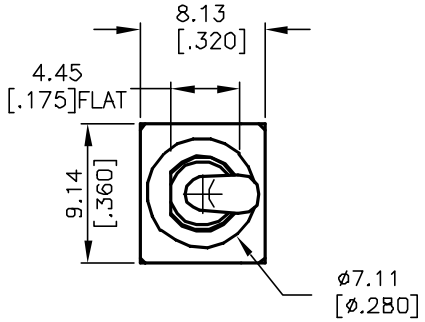

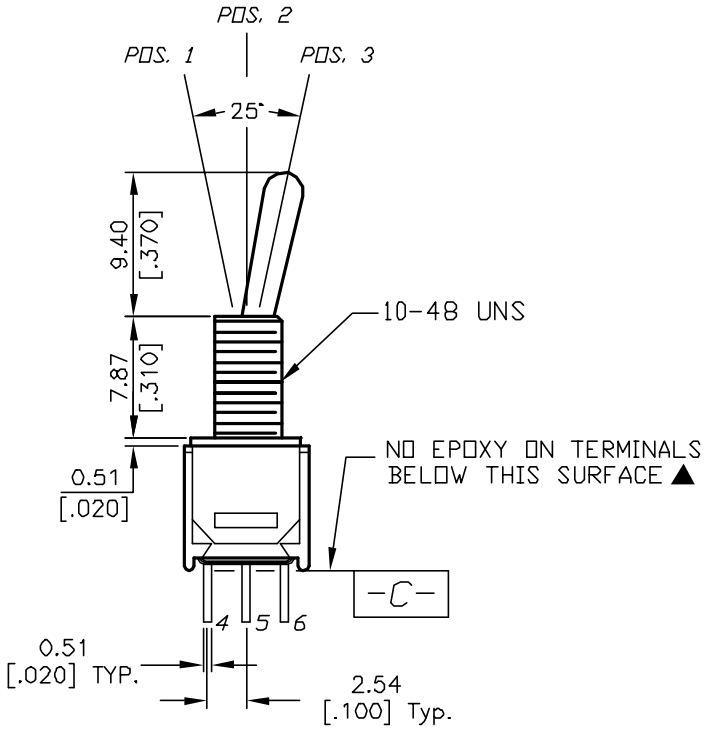

NOTES:

1. ALL DIMENSIONS IN MM[INCH]
2. GENERAL TOLERANCE: 0.0=±0.4
   0.00=±0.25
3. TERM. NOS. FOR REF. ONLY
4. CONTACT RATING: 0.4 (VA) max. @20 VAC or DC max.
5. ▲ FIXED TERMINAL & MOVING CONTACT: Cu alloy w/ Au plate over Ni plate.
6. ELECTRIC LIFE: 30,000 make-and-break cycles at full load.
7. INSULATION RESISTANCE: 1,000 M ohm min.
8. DIELECTRIC STRENGTH: 1,000 V RMS @sea level.
9. OPERATING TEMP.: -30°C to 85°C
10. ▲ DENOTES CRITICAL PARAMETER

REV.	ECN No.	DESCRIPTION	DATE	CHKD
A	12940	RELEASED FOR PRODUCTION	3/21/03	AR

THE INFORMATION CONTAINED IN THIS DOCUMENT IS PROPRIETARY TO E-SWITCH AND IS NOT TO BE COPIED OR TRANSFERRED

E-SWITCH®

TITLE 200MDP1T1B5M2QE

SCALE	DATE	DR	DWG	REV
2:1	3/21/03	AR	T221051	A