Apr.1.2017 Copyright 2017 HIROSE ELECTRIC CO., LTD. All Rights Reserved.

	COUNT	DESCRIPTION OF REVISIONS	BY	CHKD	DATE		COUNT	DESCRIPTION OF REVISIONS	BY	CHKD	DATE
△					. .	△					. .
△					. .	△					. .
△					. .	△					. .

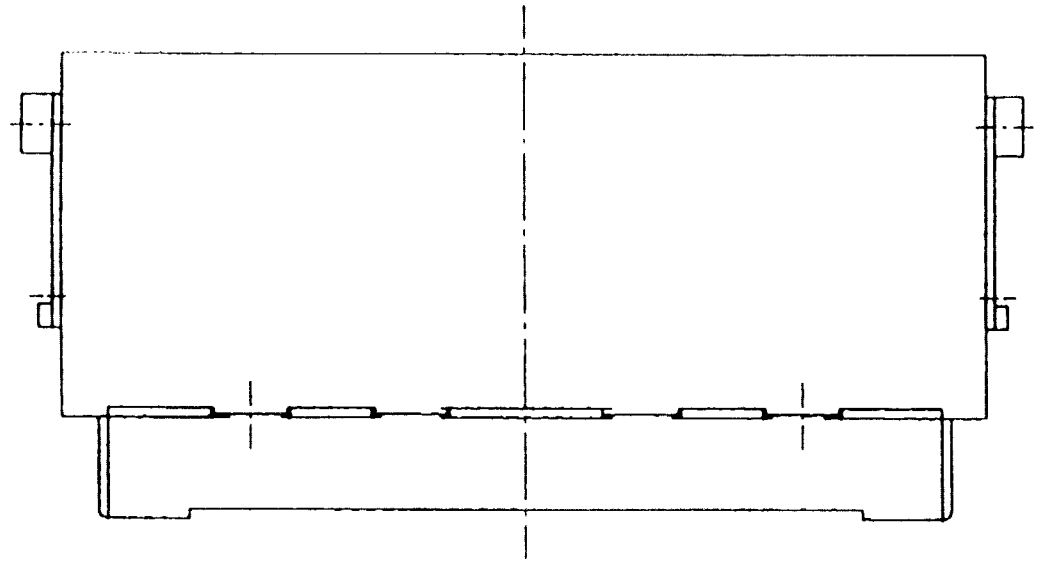

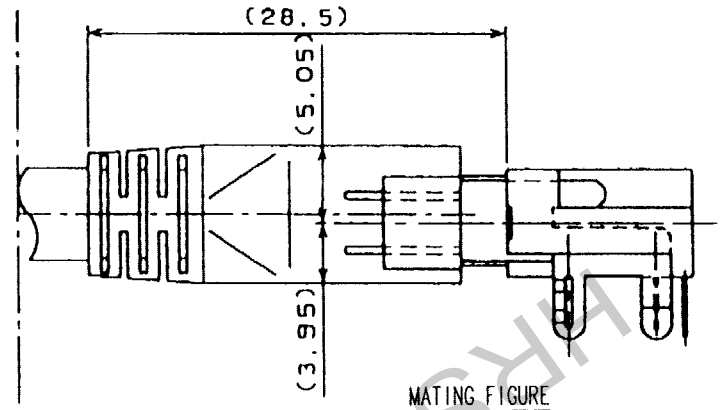

MATING FIGURE
(2/1)

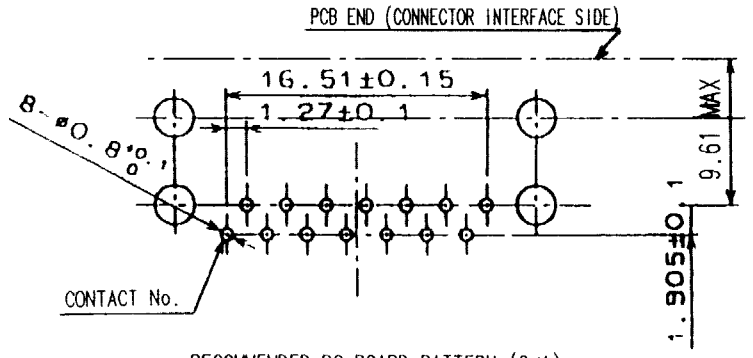

RECOMMENDED PC BOARD PATTERN (2/1)

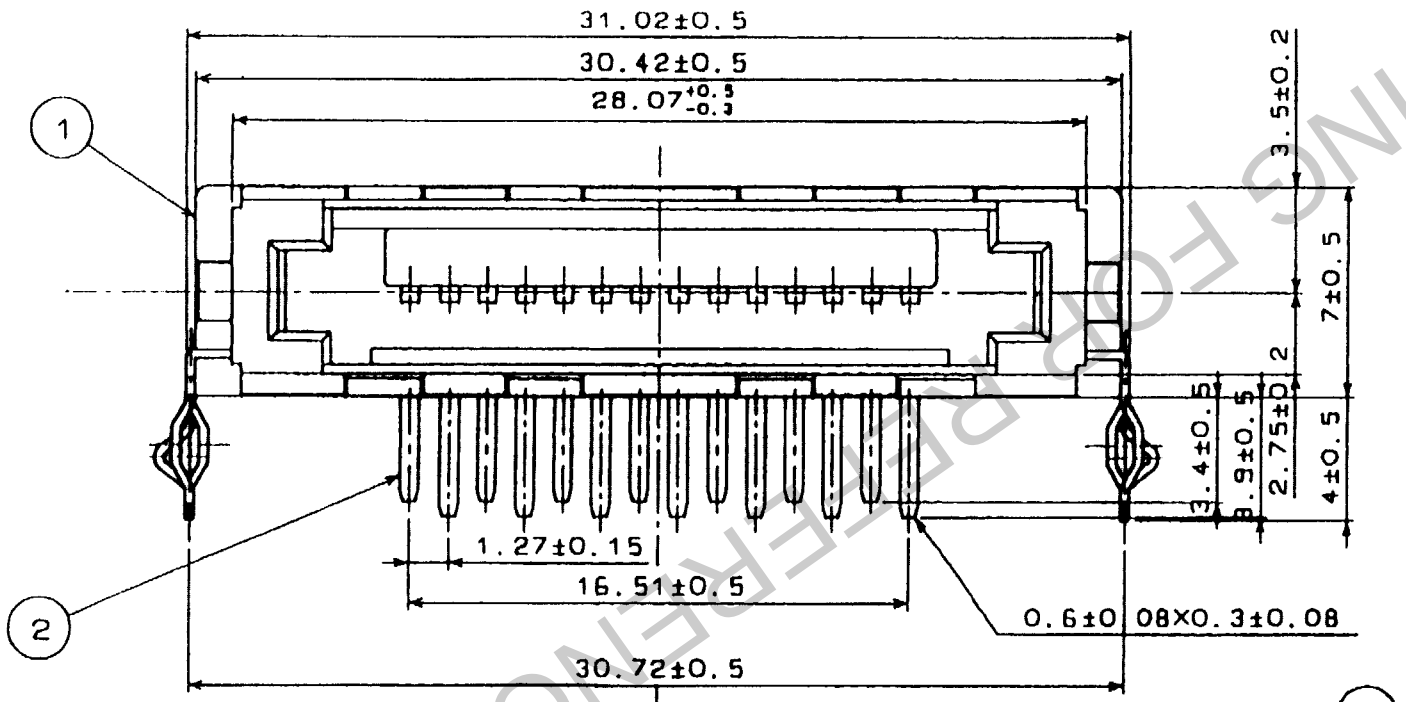

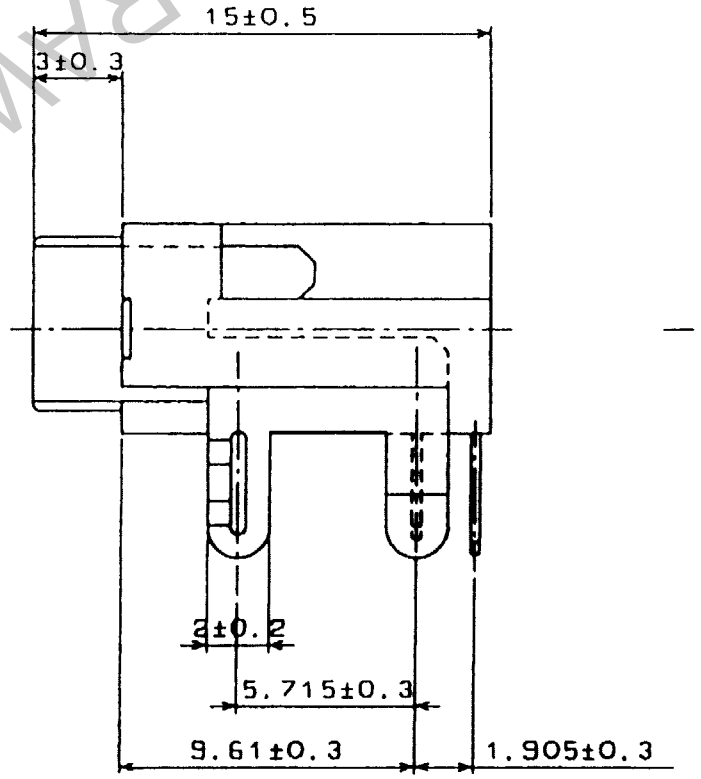

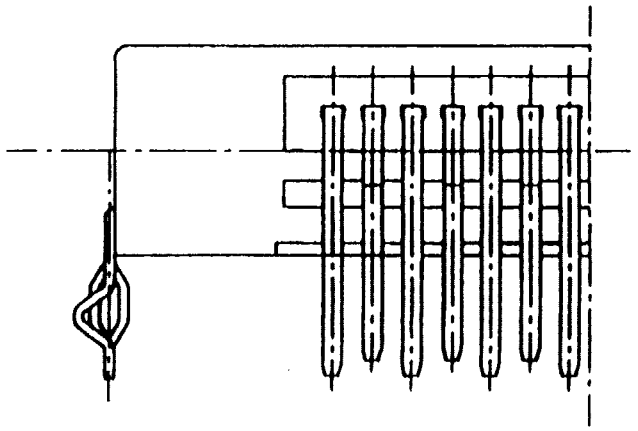

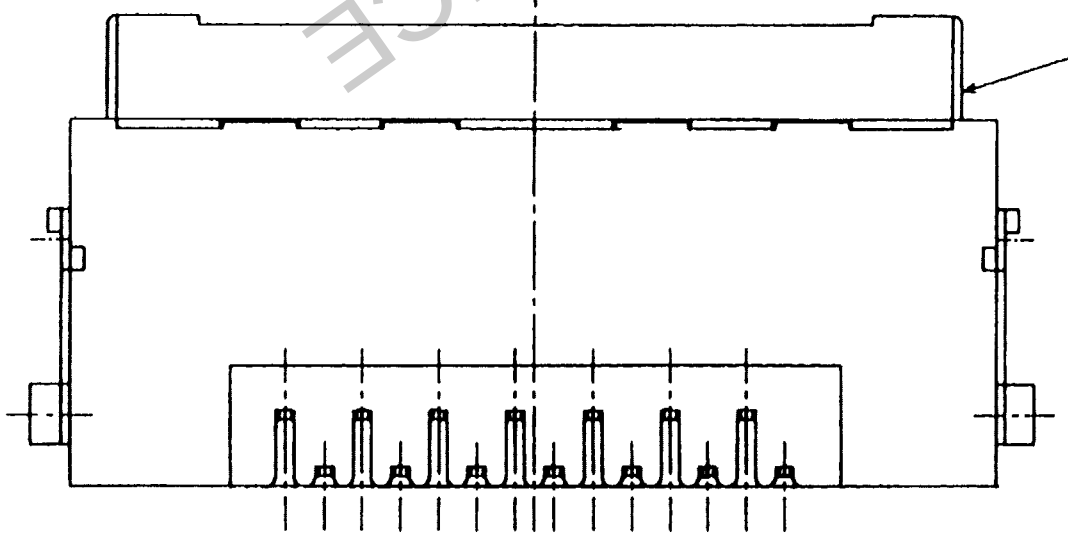

NO.	MATERIAL	FINISH, REMARKS	NO.	MATERIAL	FINISH, REMARKS
2	PHOSPHOR BRONZE	SELECTIVE GOLD PLATING 0.2μm			
1	PBT	UL94V-0(BLACK)	3	PHOSPHOR BRONZE	TIN PLATING

CODE NO.(OLD)	DRAWN	DESIGNED	CHECKED	APPROVED	RELEASED
CL	T. Hamaya 03.12.10	T. Hamaya 03.12.10	T. Watanabe 03.12.11	H. Miwa 03.12.12	. .

SCALE 4 : 1
UNITS mm

DRAWING NO. EDC3-042380-01

PART NO. 3110-14SB(50)

HRS HIROSE ELECTRIC CO., LTD

CODE NO. CL231-0021-5-50

1/1

FORM NO.229

TO
Q

HRS DRAWING FOR REFERENCE