| PART NUMBER | ITEM ① BODY | ITEM ② CONTACT | ITEM ③ INSULATOR |
|---|---|---|---|
| 142-0594-001 | BRASS<br>GOLD PL .00001 MIN OVER<br>NICKEL PL .00005 MIN OVER<br>COPPER PL .00005 MIN | BERYLLIUM COPPER<br>GOLD PL .00003 MIN OVER<br>NICKEL PL .00005 MIN OVER<br>COPPER PL .00005 MIN | TEFLON |
| 142-0594-006 | BRASS<br>NICKEL PL .0001 MIN OVER<br>COPPER PL .00005 MIN | BERYLLIUM COPPER<br>GOLD PL .00003 MIN OVER<br>NICKEL PL .00005 MIN OVER<br>COPPER PL .00005 MIN | TEFLON |

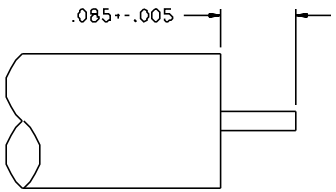


CABLE STRIP DIMENSIONS

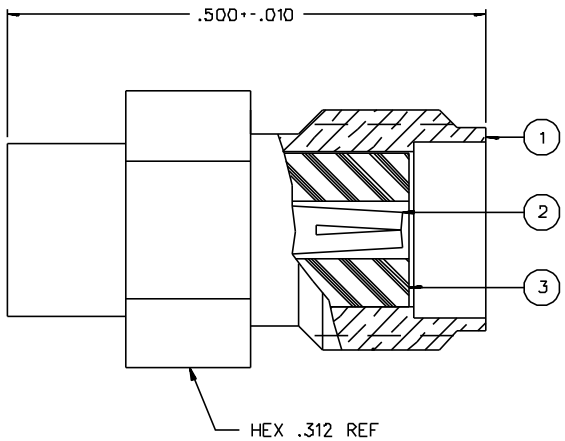


NOTES:

1. SPECIFICATIONS:

IMPEDANCE: 50 OHMS
FREQUENCY RANGE: 0-18.0 GHZ
VSWR: 1.05+.0DBF MAX (F IN GHZ)
WORKING VOLTAGE: 500 VRMS MAX AT SEA LEVEL
DIELECTRIC WITHSTANDING VOLTAGE: 1500 VRMS MIN AT SEA LEVEL
INSULATION RESISTANCE: 5000 MEGOHM MIN
CONTACT RESISTANCE:
CENTER CONTACT - INITIAL 3.0 MILLIOHM MAX, AFTER ENVIRONMENTAL 4.0 MILLIOHM MAX
OUTER CONDUCTOR - INITIAL 2.0 MILLIOHM MAX AFTER ENVIRONMENTAL NOT APPLICABLE
BODY TO CABLE - 0.5 MILLIOHM MAX
CORONA LEVEL: 375 VOLTS MIN AT 70,000 FEET
INSERTION LOSS: $\sqrt{.03F}$ (F IN GHZ) AT 10 GHZ
RF LEAKAGE: -90 DB MIN AT 2 TO 3 GHZ
RF HIGH POTENTIAL WITHSTANDING VOLTAGE: 1000 VRMS MIN AT 5 TO 7.5 MHZ

MECHANICAL:

ENGAGE/DISENGAGE TORQUE: 2 INCH-POUNDS MAX
MATING TORQUE: 7-10 INCH POUNDS
COUPLING PROOF TORQUE: NOT APPLICABLE
COUPLING NUT RETENTION: NOT APPLICABLE
CONTACT RETENTION: NOT APPLICABLE
CABLE ACCEPTABILITY: RG 402 DIA .141 SEMI RIGID
CABLE HEX CRIMP SIZE: NOT APPLICABLE
CABLE RETENTION: 60 LBS MIN AXIAL FORCE
55 INCH-OUNCE MIN TORQUE
DURABILITY: 500 CYCLES MIN

ENVIRONMENTAL:

(MEETS OR EXCEEDS THE APPLICABLE PARAGRAPH OF MIL-PRF-39012)
THERMAL SHOCK: MIL-STD-202, METHOD 107, CONDITION B,
EXCEPT 115° C HIGH TEMP
OPERATING TEMPERATURE: -65 DEG C TO 165 DEG C
CORROSION: MIL-STD-202, METHOD 101, CONDITION B
SHOCK: MIL-STD-202, METHOD 213, CONDITION I
VIBRATION: MIL-STD-202, METHOD 204, CONDITION D
MOISTURE RESISTANCE: MIL-STD-202, METHOD 106

DRAWING NO.
C - 142-0594-001/010

| 0 | REVISIONS | | |
|---|---|---|---|
| ENGINEERING RELEASE | | | |
| 1 | 12-06-88 | EJ TAK RJB AAW | 12-14-88 ECO 23717 |
| VERSION UPDATE | | | |
| 2 | 03-09-89 | EJ TAK RJB AAW | 04-10-89 ECO 23882 |
| ADDED: 115° C HIGH TEMP TO THERMAL SHOCK SPEC. | | | |
| 3 | 06-06-90 | EJ CB DD RJB AAW | 7-3-90 ECO 24436 |
| CHANGED: .085+-.005 WAS .085+-.015. 10 GHZ WAS 9 TO 12 GHZ. DELETED: .424+-.010 ADDED: HEX .312 REF | | | |
| 4 | 11-18-90 | RH RJB | 11-26-90 ECO 24971 |
| VERSION UPDATE | | | |
| 5 | 9-6-91 | DB RJB | ECO 40499 |
| UPDATED COMPANY LOGOS | | | |
| * REVISION NUMBER FOLLOWED BY AN ALPHA CHARACTER INDICATES DRAWING CLARIFICATION OR PART NUMBER ADDITION ONLY. * | | | |
| 5a | 5-2-02 | RJB | 5-24-02 ECN 48386 |

CUSTOMER DRAWING

THIS DRAWING TO BE INTERPRETED PER ANSI Y 14.5M - 1982

"μSTATION"

COMPANY CONFIDENTIAL

| TOLERANCE UNLESS OTHERWISE SPECIFIED | | DRAWN BY RER | DATE 2-19-87 | JOHNSON a cinch connectivity solutions brand | Cinch Connectivity Solutions 299 Johnson Ave. Ste. 100 Waseca, MN 56093 1-800-247-8256 |
|---|---|---|---|---|---|
| DECIMALS .XX | mm | CHECKED BY | DATE | TITLE | JACK ASSEMBLY, STR CABLED, SMA, RG 402 |
| .XXX | | APPROVED BY TAK | DATE 12-7-88 | | |
| MATL | | APPROVED BY RJB | DATE 12-7-88 | CODE NO. | DRAWING NO. C - 142-0594-001/010 |
| FINISH | | RELEASE DATE | 12-14-88 | SCALE 10:1 | U/M INCH SHEET 2 OF 2 |