REV	ECN NO	REVISIONS	DRN	CKD	APP	DATE
A	———	NEW RELEASE	TWC			

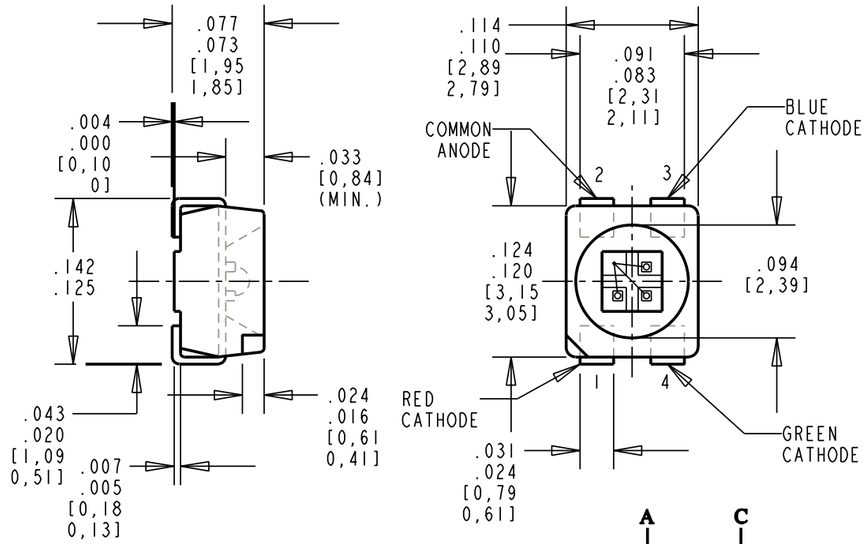

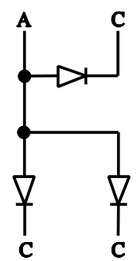

POLARITY

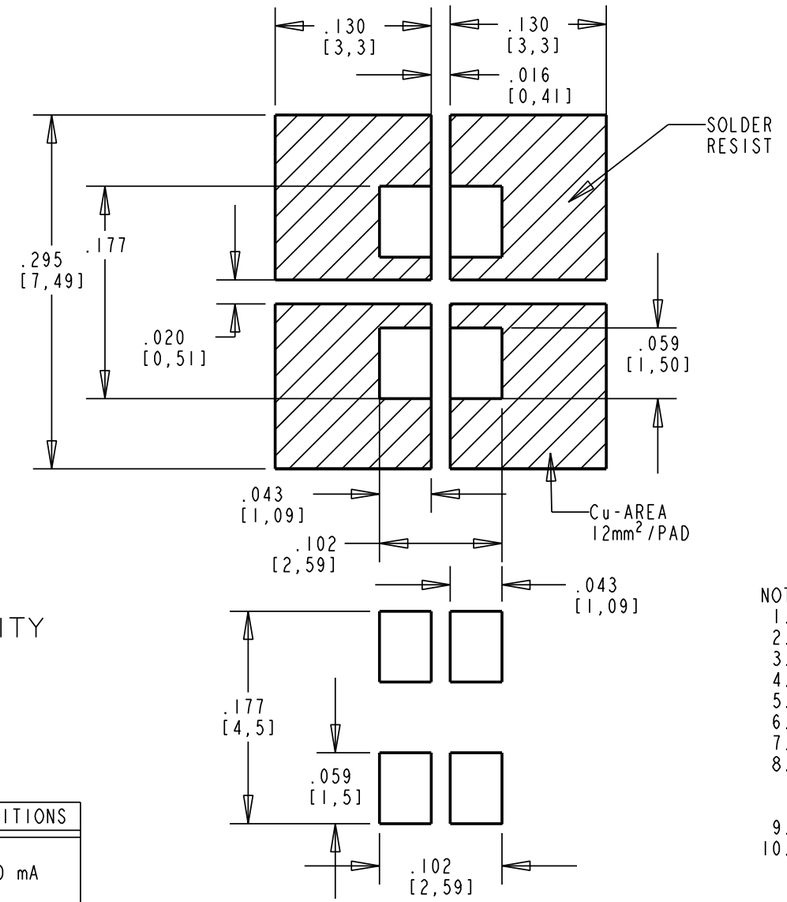

RECOMMEMDED SOLDER PAD LAYOUT

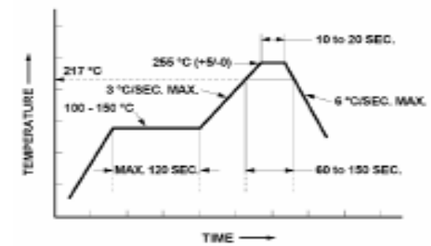

RoHS COMPLIANT (Pb FREE)
REFLOW SOLDERING PROFILE

NOTES:
1. EPOXY COLOR: WATER CLEAR.
2. DIE: (BLUE: InGaN, GREEN: InGaN, RED: AlInGap).
3. LEADS: TIN PLATED, BASE METAL COPPER ALLOY.
4. SOLDER ADHERANCE: BOTH LEADS PER MIL-STD-202E, METHOD 208C.
5. PART TAPED AND REELED PER EIA-RS-481-1.
6. SUFFIX -302F FOR 20 PCS ON A SAMPLE TAPE STRIP.
7. SUFFIX -307F FOR 7" DIAMETER REEL, PACKAGED 2000 PCS PER REEL.
8. LABELING FOR REEL AND OUTSIDE OF ALUMINUM FOIL BAG: DIALIGHT P/N, R/G/B TRI-COLOR, QUANTITY PER REEL, DATE CODE, INTENSITY BIN CODE, LOT NUMBER AND COUNTRY OF ORIGIN.
9. DIALIGHT P/N:597-7711-302F, 597-7711-307F.
10. DEVICES HAVE A MOISTURE SENSITIVITY LEVEL OF 2a. SHELF LIFE IN SEALED BAG: 24 MONTHS @ <40 °C AND <90% RELATIVE HUMIDITY.

OPERATING CHARACTERISTICS AT 25 °C AMBIENT

LED CHARACTERISTICS	COLOR	MIN.	TYP.	MAX.	UNITS	TEST CONDITIONS
LUMINOUS INTENSITY	BLUE GREEN RED	25 99 40	40 160 80	60 180	mcd	I_F = 20 mA
FORWARD VOLTAGE	BLUE GREEN RED		3.4 3.4 1.9	4.05 4.05 2.4	V	I_F = 20 mA
REVERSE CURRENT	BLUE GREEN RED		100 100 100		µA	V_R = 5V
PEAK WAVELENGTH	BLUE GREEN RED		468 523 635		nm	I_F = 20 mA
DOMINANT WAVELENGTH	BLUE GREEN RED		470 525 626		nm	I_F = 20 mA
2 X 1/2 - INTENSITY ANGLE	BLUE GREEN RED		120 120 120		DEGREES	

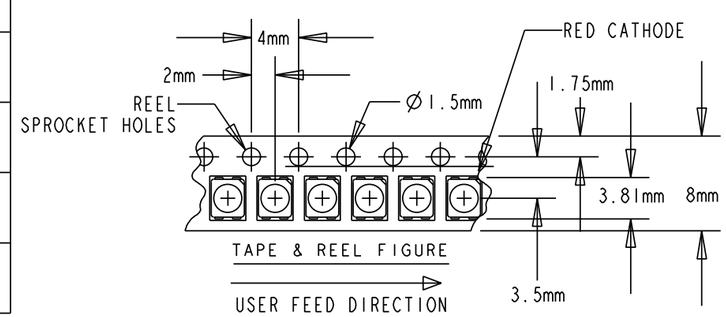

RoHS Compliant 597-7711-30XF Surface Mount LED

Part Numbers with the "F" suffix ending are RoHS Compliant.
Example: 597-7711-307F
Packaging is marked with "RoHS Compliant" label or equivalent markings.
Parts can be reflow soldered per RoHS reflow profile, wave soldered, dip soldered or hand soldered using typical lead-free soldering process with max 260°C temp. for 10-20 sec.

ABSOLUTE MAXIMUM RATINGS AT 25 °C AMBIENT	RED	GREEN	BLUE	UNIT
POWER DISSIPATION (TOTAL)	72	120	120	mW
CONTINUOUS FORWARD CURRENT (SINGLE CHIP)	30	20	20	mA
DERATE LINEARLY FROM 80°C (*BLUE & GREEN FROM 70°C) BASED ON 1 CHIP ON	1.00	*0.67	*0.40	mA/°C
DERATE LINEARLY FROM 65°C (*BLUE & GREEN FROM 50°C) BASED ON 3 CHIPS ON	0.75	*0.30	*0.30	mA/°C
SURGE CURRENT	0.5	0.5	0.2	A
REVERSE VOLTAGE	5	5	5	V
OPERATING TEMPERATURE RANGE	-55 TO +100			°C
STORAGE TEMPERATURE RANGE	-55 TO +100			°C
JUNCTION TEMPERATURE	+110			°C

ATTENTION:
OBSERVE PRECAUTIONS FOR HANDLING ELECTROSTATIC SENSITIVE DEVICES

THIS DRAWING AND THE CONTENTS HEREIN ARE CONFIDENTIAL AND THE SOLE PROPERTY OF DIALIGHT. REPRODUCTION OF THIS DRAWING OR CONSTRUCTION OF ANY PARTS WITHIN THIS DRAWING ARE FORBIDDEN WITHOUT THE WRITTEN CONSENT OF DIALIGHT.

SCALE: DRAWING SCALE
ALL DIM'S IN: INCHES (MM)
TOLERANCES: UNLESS OTHERWISE SPECIFIED
FRACTIONS: ±1/64
DECIMALS (.XX): ±.01
DECIMALS (.XXX): ±.005
DECIMALS (.XXXX): ±.0005
ANGLES: ±1°

DRAWING NUMBER: C-17396
REV: A

TITLE: R/G/B TRI-COLOR SMT LED RoHS COMPLIANT

MATERIAL

FINISH:

FSCM 83330

Dialight
1501 ROUTE 34 SOUTH
FARMINGDALE, NJ 07727

SHEET 1 OF 1
FAMILY TABLE: