THIS DRAWING IS UNPUBLISHED. RELEASED FOR PUBLICATION MAY ,2006.
© COPYRIGHT 2006 BY TYCO ELECTRONICS CORPORATION. ALL RIGHTS RESERVED.

LOC	DIST
E	B

REVISIONS

P	LTR	DESCRIPTION	DATE	DWN	APVD
	C	ECR-06-010127	16MAY06	JMS	FWK

NOTES:

1. PACK IN ACCORDANCE WITH AMP SPEC 107-3275
2. 100 TRAY PACK IN ACCORDANCE WITH AMP SPEC 107-3275
3. Au PLATING
4. Ni PLATING

5 ELECTRICAL CHARACTERISTICS

FREQUENCY RANGE:	DC – 11 GHz
NOMINAL IMPEDANCE:	50 Ohm
INSULATION RESISTANCE:	5000 MOhm
WORKING VOLTAGE:	500 Volts RMS at Sea Level
DIELECTRIC WITHSTAND VOLTAGE:	1500 Volts RMS Max
CONTACT RESISTANCE:	
CENTRE CONTACT:	1.50 mOhm Max
OUTER CONTACT:	1.00 mOhm Max
INSERTION LOSS db:	0.20 Max

6 MECHANICAL CHARATERISTICS

MOUNT NUT RECOMMENDED TORQUE:	4N
DURABILITY:	500 Cycles Min

7 ENVIRONMENTAL CHARACTERISTICS

OPERATING TEMPERATURE:	–65 to +165 DegC

8 FOR TECHNICAL DATA REFER TO YOUR LOCAL TYCO ELECTRONICS SALES OFFICE

9 ALL DIMENSIONS ARE NOMINAL FOR REFERENCE ONLY UNLESS OTHERWISE STATED

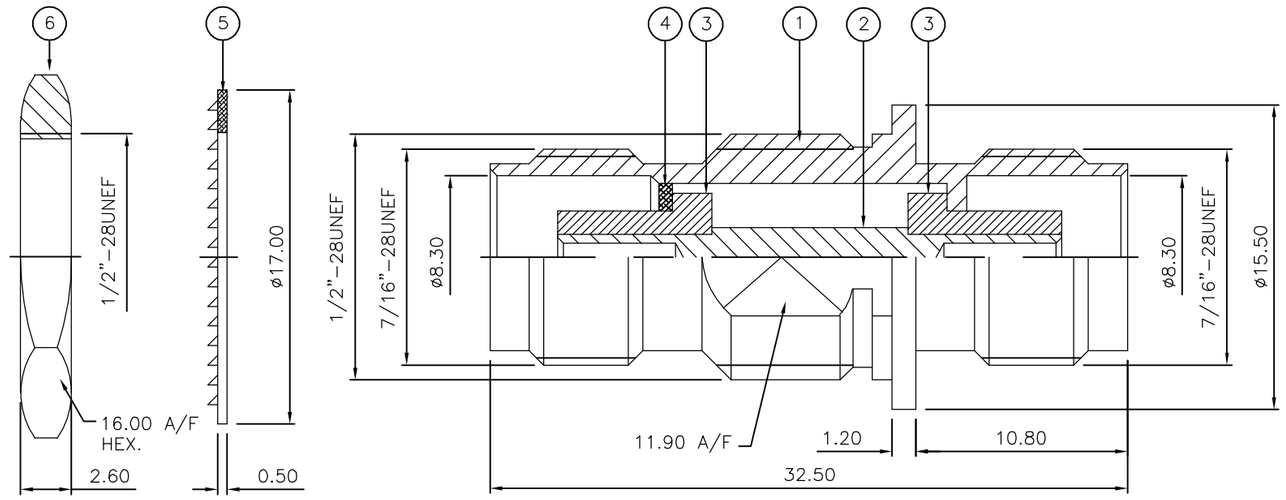

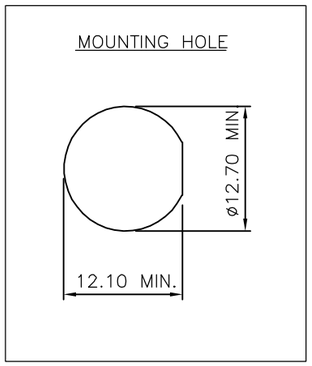

		1	1	BRASS 4	HEXAGONAL NUT	6
		1	1	STEEL 4	LOCKWASHER	5
		1	1	BRASS 4	WASHER	4
		2	2	PTFE	INSULATION	3
		1	1	BRASS 3	CONTACT	2
		1	1	BRASS 4	BODY	1
		6--0	1--0	MATERIAL	DESCRIPTION	ITEM
		2	1			
QUANTITY PER ASSY				PARTS LIST		

THIS DRAWING IS A CONTROLLED DOCUMENT.

DIMENSIONS: mm

TOLERANCES UNLESS OTHERWISE SPECIFIED:
0 PLC ± –
1 PLC ± –
2 PLC ± –
3 PLC ± –
4 PLC ± –
ANGLES ± –

MATERIAL: SEE TABLE

FINISH: –

DWN J.SANDWELL 16MAY06
CHK S.PARLOW 16MAY06
APVD F.WHEELER-KING 16MAY06
PRODUCT SPEC –
APPLICATION SPEC –
WEIGHT –

CUSTOMER DRAWING

tyco Electronics
Tyco Electronics Corporation
Bideford EX39 4HE

NAME: TNC BULKHEAD ADAPTOR J–J 50 OHM
–
–

SIZE	CAGE CODE	DRAWING NO	RESTRICTED TO
A3	00779	C-1337619	–

SCALE	SHEET	REV
NTS	1 OF 1	C