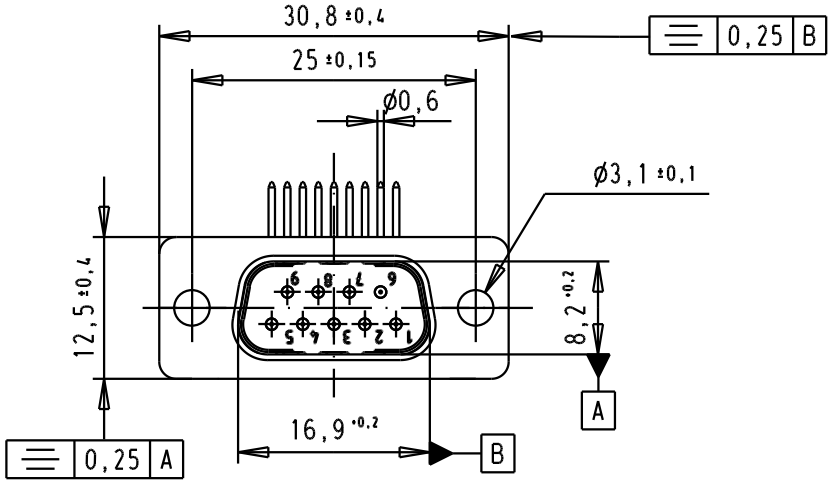

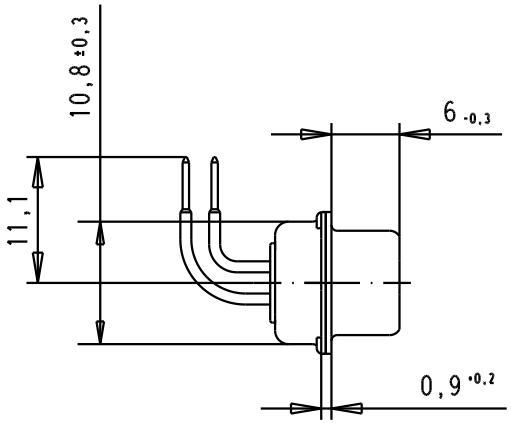

PCB Layout, Component side

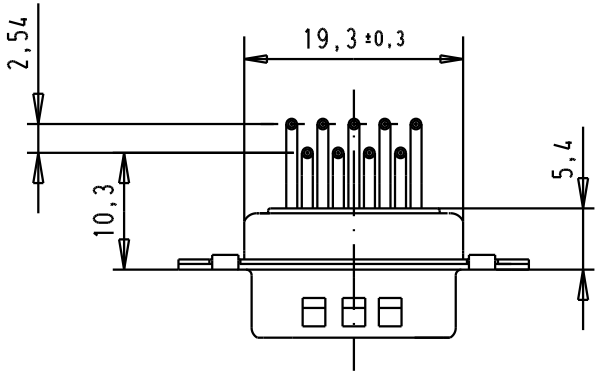

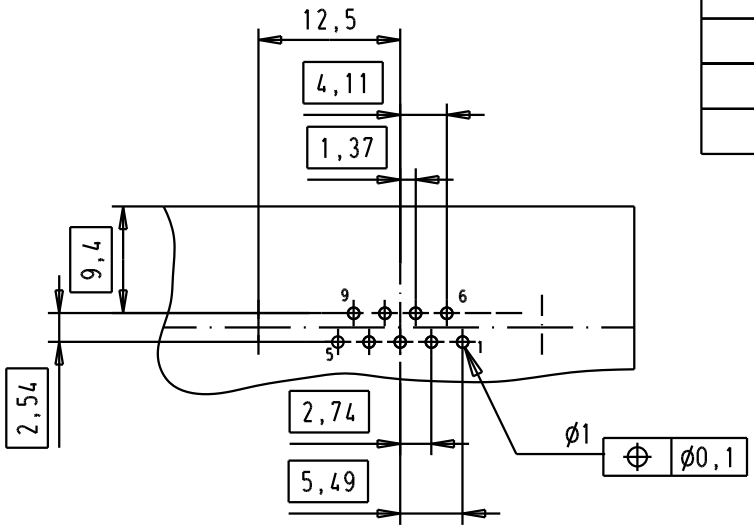

SPECIFICATION

Mating Cycles	500
Filter type	C
Capacitance	3900pf ±20%
Working Voltage	100v
Current Rating	7.5A
Insulation Resistance	>1GΩ

FREQUENCY (MHz)	ATTENUATION (dB)
5	6dB
10	11dB
50	25dB
100	35dB
500	35dB
1000	32dB

				Dat.	Name
			Detail.	8-JUL-02	CV
			Insp.		
			Stand.		
32803	12/07/05	JMDR			
31058	8-JUL-02	CV			
Mod.	Dat.	Name			

All Dim. in mm
Orig. Size DIN A 4

HARTING EURL
F-95972 Paris

D-Sub, male, angled, 9 poles, solder pins, tin plated shell with dimples and fixing holes

Ma?Mstab/ Scale: 1.5:1

TB 09641247240

Sub.

Blatt/ Page: 1/1