The information contained in this document is proprietary to VARITRONIX LTD. and shall be protected from any reproduction in part or as a whole without Varitronix's written approval.

ISSUE	AMENDMENT	DATE

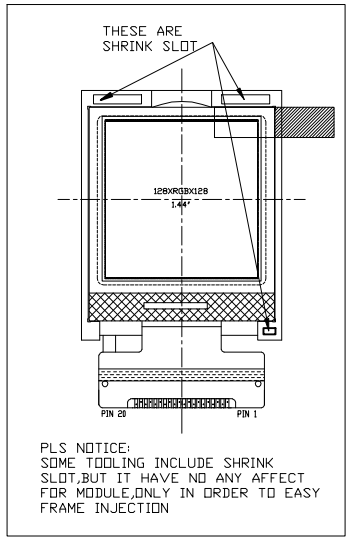

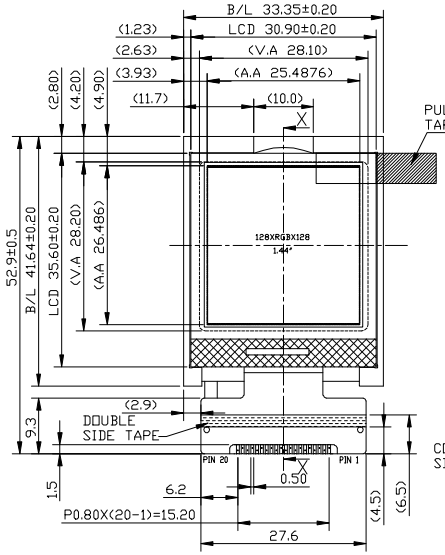

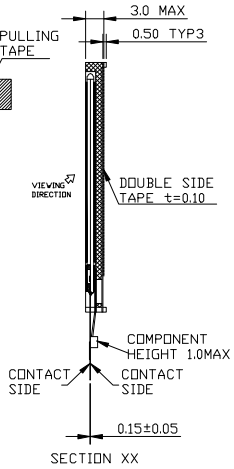

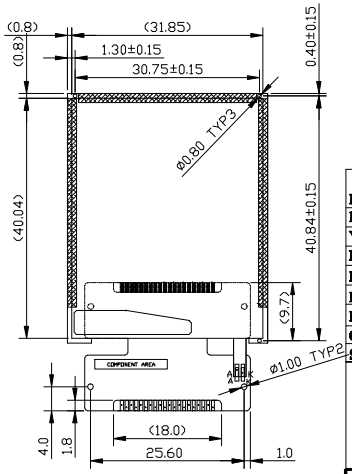

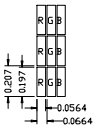

DETAIL A
(FOR REFERENCE ONLY)

DISPLAY TYPE	CSTN,65K TRANSMISSIVE	
DISPLAY RESOLUTION	128xRGBx128	
VIEWING ANGLE	6 O' CLOCK	
MUX RATIO & BIAS	1/128 DUTY,	
LCD CONTROLLER/DRIVER	UC1697A	
LOGIC VOLTAGE	~2.8V	
LCD DRIVING VOLTAGE	TBD	
OPERATING TEMPERATURE	-20°C TO +70°C	
STORAGE TEMPERATURE	-30°C TO +80°C	
BACKLIGHT TYPE	LED05: 1pcs LED	
BACKLIGHT COLOR	WHITE	
BACKLIGHT FORWARD VOLTAGE	TBD	
BACKLIGHT LUMINANCE (cd/m2) (ON THE BACKLIGHT SURFACE)	MIN.	—
	TYP.	2200
	MAX.	—

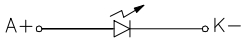

CIRCUIT DIAGRAM

PINS ASSIGNMENT:

1	2	3	4	5	6	7	8	9	10	11	12	13	14	15	16	17	18
LED_A	LED_K	VSS	NC	NC	$\overline{CS}$	$\overline{RETB}$	RS	WRD	RDB	DB0	DB1	DB2	DB3	DB4	DB5	DB6	DB7
19	20																
VSS	VDD																

NOTES:

1. ◇ : SPECIAL CHARACTERISTIC
2. + : SAFETY CHARACTERISTIC
3. ▽ : CRITICAL DIMENSION
4. (...) : REFERENCE DIMENSION

VARITRONIX LIMITED

TITLE: SPECIFICATION OF MODULE

PROJECT NO: COG-C144MVGL-01

CUSTOMER NO: N/A

TOLERANCE UNLESS OTHERWISE SPECIFIED: X.X ±0.3, X.XX ±0.1

DIMENSIONS IN MM

MATERIAL: N/A | FINISH: N/A

SCALE: DO NOT ON SCALE | OVERALL THK: N/A

THIRD ANGLE PROJECTION

	NAME	SIGN	DATE
DRAWN:	YANG GEN HUA		08.11.05
CHECKED:	LUO CHENG		
APPROVED:	HENRY HE		

ITEM NO.: COG-C144MVGL-01

DESCRIPTION: COG-C144MVGL-01

FILE NO: COG-C144MVGL-01 | REV: 0

SHEET 1 OF 1