Part Number: 63445-1410
Status: Active
Description: Anvil

Documents:
RoHS Certificate of Compliance (PDF)

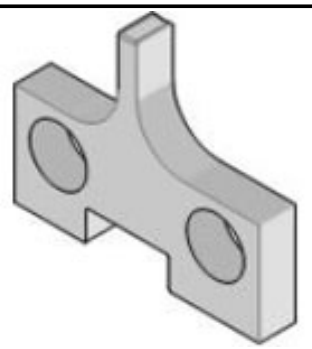

Series
image - Reference only

General

Product Family	Application Tooling
Series	T2504
Comments	See Tooling Specification (PDF) Above
Function	Cutter
Geographic Area	Global
Level of Automation	Semi-Automatic
More Detailed Tech Information	applicationtooling@molex.com
Product Name	N/A
Survey	www.molex.com//review/apptool_survey.html
Tool Type	Anvil
UPC	800753155794

Material Info

Reference - Drawing Numbers

Application Tooling Documents	ATS-STANDARD-PARTS

EU RoHS **China RoHS**
Compliance Status
Not Reviewed
REACH SVHC
Not Reviewed
Low-Halogen Status
Not Reviewed

Need more information on product environmental compliance?

Email productcompliance@molex.com
For a multiple part number RoHS Certificate of Compliance, click here

Please visit the Contact Us section for any non-product compliance questions.

Search Parts in this Series
T2504Series

Use With
63820-7300 , 63820-7500 , 63820-7570 , 63850-7500 , 63850-7570 , 63860-7500 , 63860-7570